トラスト企画 Trust Kikaku

Vehicle Report

Specification

No.	Make	Vehicle	Model	Type/Door	Score
5456	TOYOTA	MR2	E-SW20	2D	4
	First Registration	Displacement	Grade	2WD	Interior Score: C
	1995 / 12 M	2000 cc	GT-S		

Inspection Valid (Shaken)	✕ Y ✕ M	Shift Type	F5
Mileage	49,776 km		
Body Color	Base Color: White → / Color Change	Color Code: 040	AC Type: AC
Fuel	Gasoline	Interior Color: BLACK	
Recycling Deposit	8,970 JPY	Passeger	2 Seater

OEM PARTS	S R / Leather Seat	OEM AW / T V	(P S) Navi	(P W) Airbag

◎ **Specification**

- Splint Hart 15 Inch Aluminum Wheel
- HKS High Power Muffler
- MOMO Steering Wheel
- JIC Coilovers
- Aftermarket Aluminum GT Wing
- Kenwood Audio
- Panasonic ETC
- Aftermarket Clutch

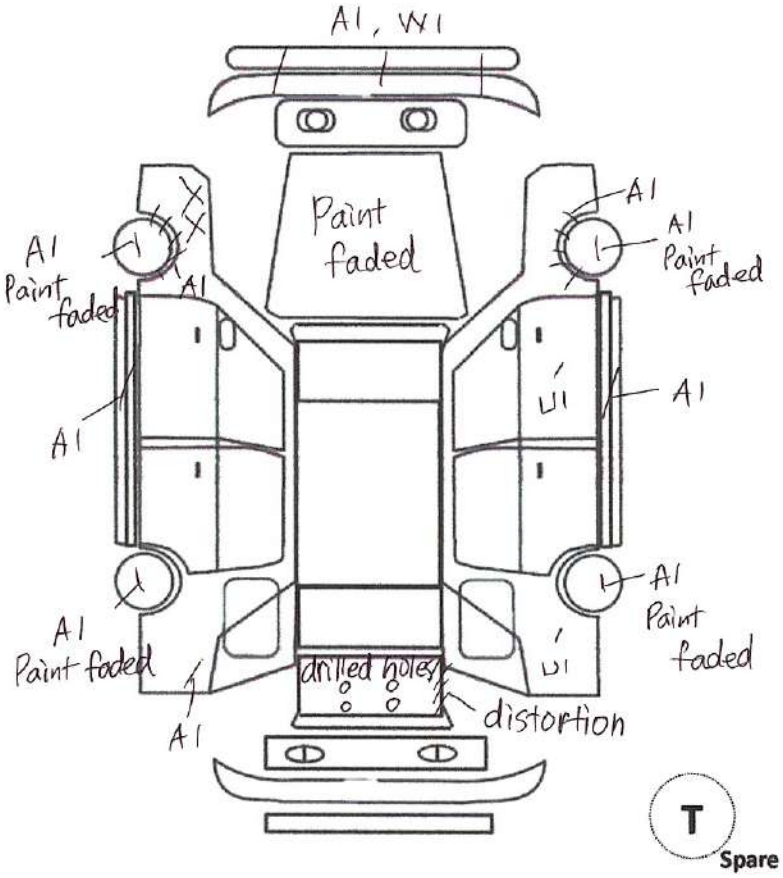

✔ **Trust Kikaku Inspection Report**

- Driver's seat side accessory case on lower dash panel isn't installed well.
- Has scratches and stains on interior.
- Has dents on jack points.
- Car undercarriage is rusty.
- Maintenance Record : Feb 2020

A	Scar	S	Rust
U	Dent	C	Corrosion
B	Scratche & Dent	G	Stone Chip
P	Repaint Required	X	Replacement Required
W	Repair Mark	XX	Replaced

Engine	3S-GTE
NA/TURBO	TURBO
Model No.	06341
Classification No.	0140

DEFECT REPORT

◎ Scar · Dent · Repir Part	◎ Electronic
· Has scratches and touch up marks on front	
bumper.	
· Has distortion on trunk.	
· Left front indicator is loosen and shaky.	
· Right rear fender has dent.	
· Right door has dnet.	
· Front fender has marks of rubbed with tire.	

OTHER	RECOMMEND POINT
· Has dents on jack points.	· Rare low mileage MR2!!
· Car undercarriage is rusty.	· 3S Turubo Engine!! Fast!
· Has scratches and stains on interior.	